DRAWING MADE IN THIRD ANGLE PROJECTION

THIS DRAWING IS UNPUBLISHED. RELEASED FOR PUBLICATION ,19 .

© COPYRIGHT 19 BY AMP INCORPORATED. ALL INTERNATIONAL RIGHTS RESERVED.

MOD	LOC	DIST
8	BD	39

REVISIONS

P	F	ZONE	LTR	DESCRIPTION	DATE	APPD
			D	REDRAWN ON CAD	4-17-90	–
/	/		E	REV PER ECN BD4276	12/07/90	–

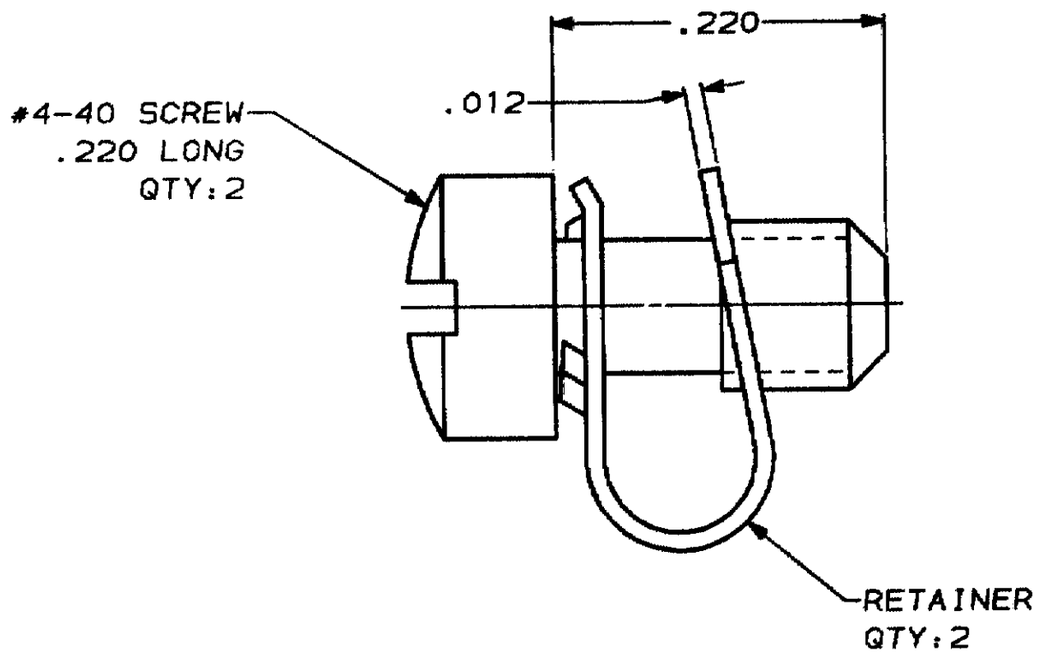

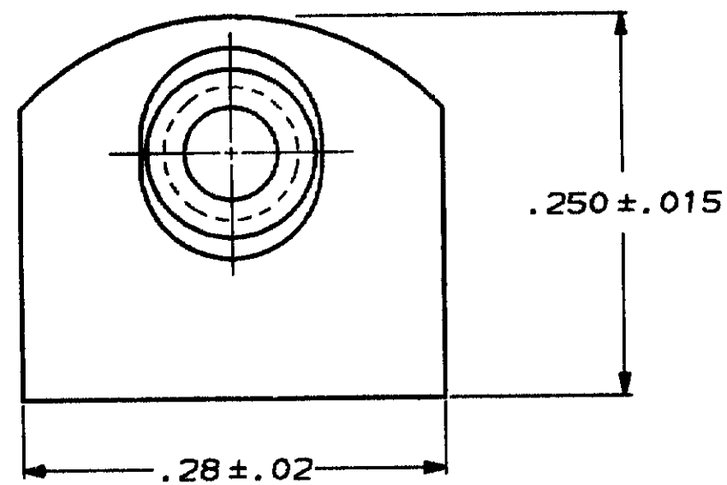

1. PARTS PACKAGED UNASSEMBLED.
2. ZINC PLATED PER ASTM B633, TYPE II, CLASS SCI, YELLOW CHROMATE.
3. STAINLESS STEEL PER ASTM A666.
4. PARTS PACKED AS A UNIT KIT.
5. PARTS INDIVIDUALLY BULK PACKED & SHIPPED AS A UNIT PACKAGE.

PACKAGING	PART NUMBER
5	745647-2
4	745647-1

DO NOT SCALE PRINT. UNLESS SPECIFIED DIMENSIONS IN INCHES TOLERANCES ON: 2 PLC DEC ± – 3 PLC DEC ± .010 ANGLES ± –

MATERIAL: SCREWS: STEEL RETAINERS: 3

FINISH: SCREWS: 2

DR 4-17-90 J GALLUCCI BG
CHK 6-15-90 W.B. LENKER
APPD 7-11-90 J.E. WESTMAN
APPD 7-18-90 J. ASSINI
PRODUCT SPEC –
APPLICATION SPEC –
WEIGHT –

AMP INCORPORATED Harrisburg, Pa. 17105

NAME: KIT, SCREW RETAINER AMPLIMITE™ HDE

SIZE	PSCH NO	DRAWING NO
B	00779	745647
SCALE 10:1		SHEET 1 OF 1

CUSTOMER DRAWING

AMP 1470-15 REV 3-89

07 DEC 1990 10:57:38 AMPTOOL